OG72 SEATED BICEPS CURL

PRODUCT GUIDE

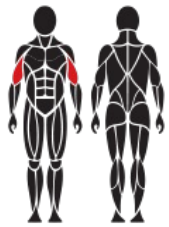

Target muscles

PRODUCT FEATURES

- Effective and safe exercise equipment
- Adjustable loading:
  - 10-50 kg (1 x weight unit)
  - 2,5 kg increments
- Adjustable seat (height)
- Multigrip (width)
- Maintenance-free
- Can be installed on a movable platform

COLOR OPTIONS

The product comes as standard in RAL Classic colors:

RAL 5012 (blue), RAL 3020 (red), RAL 6018 (green)

RAL 1017 (yellow), or RAL 7024 (grey).

Other RAL colors are available at an additional cost.

OMNIGYM

OG72 SEATED BICEPS CURL

D I M E N S I O N S

Length	1460 mm
Width	1260 mm
Height	970 mm
Equipment weight	190 kg (1 x weight unit)

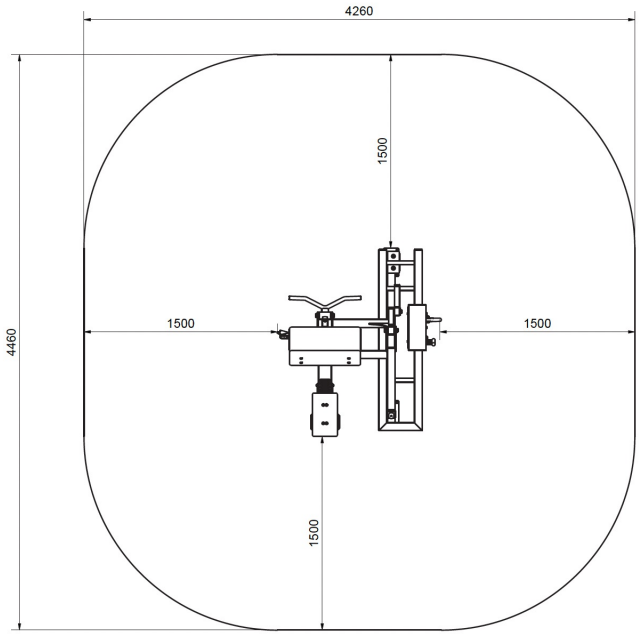

M A T E R I A L

Metal parts	Steel
Movement arm	Stainless steel
Tube strengths	3-6 mm
Coating solution	Zink and powder coating electropolishing

C O U N T R Y / S T A N D A R D

Country of manufacture	Finland
Standard	EN16630

B A S E O P T I O N S

A. Concrete	Surface mounting to concrete
B. Platform	Installed on movable platform

F O U N D A T I O N

For example: artificial turf or moldable safety platform

Concrete min 120 mm below equipment

Ground frost insulation, thickness based on the ground

Instruction guide included in delivery:

installation instructions, maintenance, usage info.

Contact: info@omnigym.com

EN16630

OMNIGYM